THE VILTER 400 SERIES COMPRESSOR PARTS CHART

BASIC FRAME & COVERS

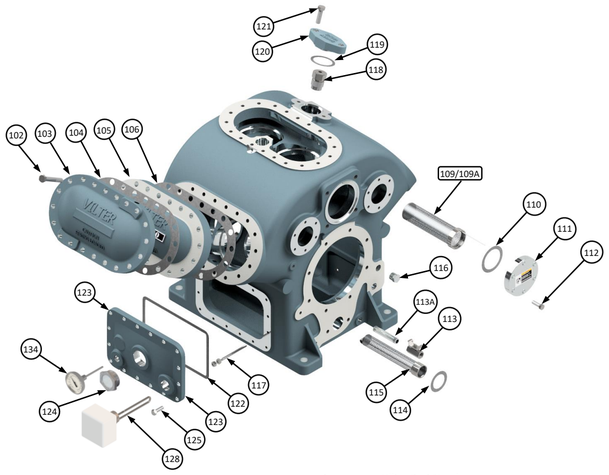

Reference Number	Vilter Part Number 440	450XL	Description
102	13152G	13152G	Screw, 5/8" X 2-1/2" Hex. Head Cap (Used w/o Water Jacket)
102 (a)	13152L	13152L	Screw, 5/8" X 3-1/2" Hex. Head Cap (Used with Water Jacket)
103	30299A	30299A	Cover, Water Jacket
104	33329A	33329A	Gasket, Water Jacket
105	*	*	Cover Cylinder
106	33330A	33330A	Gasket, Cylinder Cover
109	*	*	Screen, Suction
109A	*	*	Bag Suction Screen (Not Shown)
110	*	*	Gasket, Suction Screen/ Suction Tee Cover
111	*	*	Cover, Suction Screen Cover Suction Tee
112	*	*	Screw, Hex Head Cap
113	1956H	1956H	Valve, 1/2" Oil Charge and Drain (Ammonia)
113	1956A	1956A	Valve, 1/2" Oil Charge and Drain (Halocarbon)
113A	13189G	13189G	Nipple 1/2" X 4" Sch 80 Pipe
114	31889A	31889A	Gasket, Crankcase Oil Screen
115	A31886A	A31886A	Screen, Crankcase Oil
116	13264D	13264D	Plug, 1/2" Hex. Head Pipe
116	13264E	13264E	Plug, 3/4" Hex. Head Pipe

Reference Number	Vilter Part Number 440	450XL	Description
117	A31936A	A31936A	Pin Retaining Assembly For Crankcase Oil Screen
118	1721B	1721C	Safety Valve, Internal Relief
119	11323G	11323G	Gasket, 2" Flange
120	31954A	31954A	Cover, Safety Valve
121	13152E	13152E	Screw, 5/8" X 2" Hex Head Cap
122	31894A	31894A	Gasket, Handhole Cover
123 (b)	*	*	Cover, Handhole
124	1484A	1484A	Glass, Oil Sight- 2"
125	2796E	2796E	Screw, 1/2" X 1-1/2" Hex Head Cap
128	*	*	Heater, Crankcase Oil
134	*	*	Thermometer, Crankcase Oil

(a) Use VPN 13152M (Screw, 5/8" X 3-3/4" Hex. Head Cap) for four bolt hole locations at raised face on Water Jacket
(b) There are different versions of Handhole cover. Handhole cover for 3" sight glass is not available (compressors with serial number starting from 0 thru 13049).

* Check your Operator's Manual for correct Part Number for your specific compressor model.

CRANKSHAFT & FRONT BEARING COVER

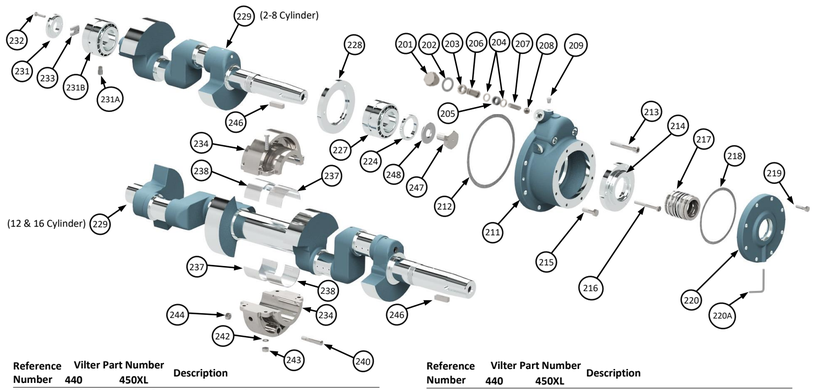

Reference Number	Vilter Part Number 440	450XL	Description
202	30651C	30651C	Cap, Valve Gasket
201-208	KT486	KT486	Oil Relief Valve Kit
209	13264B	13264B	Plug, 1/4" Pipe
209-211	A36240A	-	Cover, Front Bearing Assy. For -2 1/2" Shaft (Requires Oil Orifice in Item #214)
209-211	A36241A	A36241A	Cover, Front Bearing Assy. For 3" Shaft (Requires Oil Orifice in Item #214)
212	31890A	31890A	Gasket, Bearing Cover
213	13159E	13159E	Screw, 5/8" X 4" Socket Hd.
214	31885A	-	Retainer, Front Bearing (w/oil hole) for 2-1/2" Shaft
214	33500A	33500A	Retainer, Front Bearing (w/oil hole) for 3" Shaft
215	13152E	13152E	Screw, 5/8" X 2" Hex. Head
216	2796EV	2796EV	Screw, 1/2" X 4" Hex. Head
217	A33483A	-	Seal, 2-1/2" Shaft Assembly
217	Check Model # (In Parentheses)		KT508: Shaft Seal & Gasket (All 440)
218	Check Model # (In Parentheses)		KT509: Shaft Seal & Gasket (12-16 Cyl. 440, All 450XL)
219	2976EL	2976EL	Screw, 1/2" X 1-3/4" Hex. Hd.
220	31044A	-	Cover, 2-1/2" Shaft Seal
220	32564A	32564A	Cover, 3" Shaft Seal
220A	35078A	35078A	Tube, Oil Drain
224	KT366	-	Locknut, 2-1/2" Shaft
224	KT367	KT367	Locknut, 3" Shaft

Reference Number	Vilter Part Number 440	450XL	Description
227	KT368	-	Front Bearing, 2-1/2" Shaft
227	KT369	KT369	Front Bearing, 3" Shaft
228	33144A	-	Ring, 2 1/2" Shaft, Front Bearing Retainer
228	33145A	333145A	Ring, 3" Shaft, Front Bearing Retainer
229	Not Sold Separately		Crankshaft, Bare Shaft
224-244	*	*	Crankshaft with Bearings
231	31904A	31904A	Retainer, Rear Bearing
231A/231B	KT353	KT353	Rear Bearing and Lock Pin
232	1736G	1736G	Screw, 5/16" X 1-1/2" Hex. Hd.
233	33403A	33403A	Crank, Oil Pump Drive
234	A32163A	A32163A	Case, Bearing Support
237	33508A	33508A	Bearing Half, Upper Right or Lower Left
238	33508B	33508B	Bearing Half, Upper Left or Lower Right
240	33497A	33497A	Pin, Threaded Taper
242	13165F	13165F	Washer, 1/2" Lock
243	1726E	1726E	Nut, 1/2" Hex
244	13253F	13253F	Nut, 9/16" Hex.
246	31994B	-	Key, 2-1/2" Crankshaft
246	33505B	33505B	Key, 3" Crankshaft
247	31956A	31956A	Screw Flywheel Hub
248	33495A	33495A	Washer, 3" Shaft, Flywheel Hub Screw

* Check your Operator's Manual for correct Part Number for your specific compressor model. Splash shield included in crankshaft with bearings.

PISTON, CONNECTING ROD & SAFETY HEAD

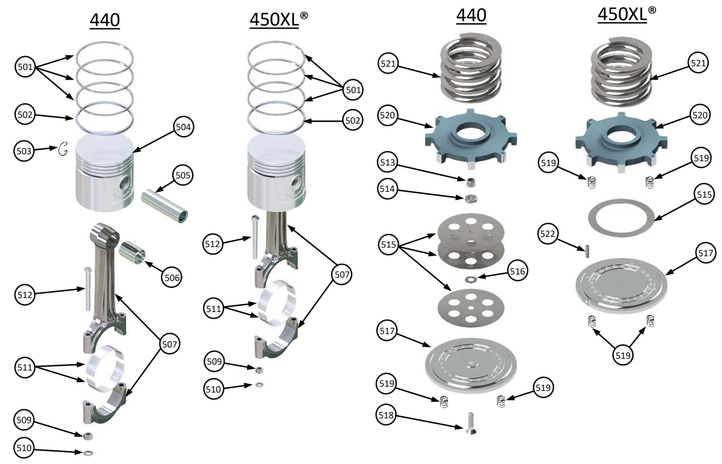

Reference Number	Vilter Part Number 440	450XL	Description
501	31989M	31989M	Piston Ring, Compression
502	31989N	31989N	Piston Ring, Oil
503	33244A	-	Snap Ring, Piston Pin
501-505	KT213	-	Piston, Rings, and Pin Kit
501-512	KT478	KT573	Piston, Rings, and Connecting Rod Assembly
506-512	KT463	-	Connecting Rod with Bearings
506	31896B	-	Bushing, Piston Pin
507	See Kits Above		Connecting Rod
509	2027A	2027A	Nut, 3/8" UNF, Hex
510	2028A	2028A	Nut, 3/8" Lock
511	KT512	KT575	Bearing Set, Connecting Rod – Standard
511	KT513A	KT399A	Bearing Set, Connecting Rod – 0 . 015" Undersize
511	KT513	KT399B	Bearing Set, Connecting Rod – 0 . 030" Undersize
512	31955A	31955A	Bolt, Connecting Rod
513-518	A32695C	-	Safety Head Assembly - Ammonia

Reference Number	Vilter Part Number 440	450XL	450XL Booster	Description
513-518	A32695D	-	-	Safety Head Assembly - Halocarbon
513	1776B	-	1776B	Nut 3/8" Lock Valve Retaining
514	31990B	-	31990B	Washer, Diaphragm Valve
515	31939B	-	31939B	Valve, Diaphragm Discharge
515	-	35080SS	-	Plate, Discharge Valve
516	31990A	-	31990A	Spacer, Diaphragm Valve
517	33531B	-	33531B	Safety Head, Ammonia
517	33532B	-	33532B	Safety Head, Halocarbon
517/522	-	A35082A	-	Safety Head & Pins Assembly - Ammonia
517/522	-	A35272A	-	Safety Head & Pins Assembly - Halocarbon
518 (a)	31964A	-	-	Screw, Valve Retaining - 60°
518	1527B	-	1527B	Screw, Valve Retaining - 82°
519	33803A	33803A	33803A	Spring, Valve
520	31941B	-	31941B	Yoke, Safety Head
520/522	-	KT543	-	Safety Head Yoke and Pin Kit
521	31882A	35252A	35252A	Spring, Safety Head
522	-	1712F	-	Pin, 3/16" X 11/16" Roll

(a) Applicable for compressors with serial number starting from 3638 thru 13490

REAR BEARING COVER & FILTER ASSEMBLY

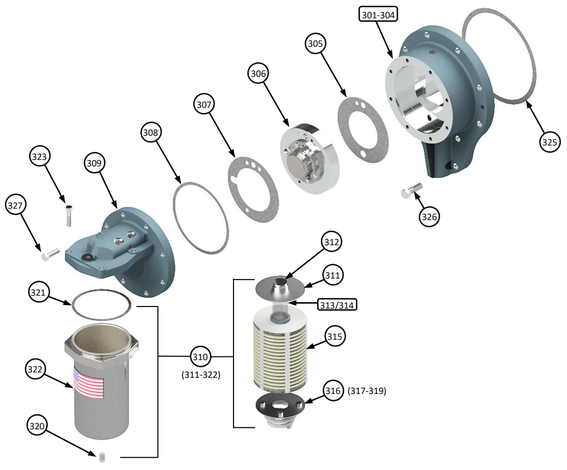

Reference Number	Vilter Part Number 440	450XL	Description
301-304	KT092	KT092	Rear Bearing Cover Assembly
306	KT519A	KT519A	Oil Pump Assembly
307-323	KT256	-	Conversion Kit, Std. Tri-Micro
309	*	*	Cover, Oil Pump and Filter Head
310	A35240A	A35240A	Tri-Micro Oil Filter Assembly with Bypass Relief
310	-	-	Tri-Micro Oil Filter Assembly w/o Bypass Relief
311	1448J	1448J	Spool, Internal with Bypass Relief
311	-	-	Spool, Internal w/o Bypass Relief
312	1448H	1448H	Seal, Spool End
313	1448K	1448K	Strainer Tube
314	1448L	1448L	Ring, Strainer Tube Retaining

Reference Number	Vilter Part Number 440	450XL	Description
315/321	1448C	1448C	Oil Filter Element with Gasket for use with Bypass Relief
315/321	-	-	Oil Filter Element with Gasket for use w/o Bypass Relief
316	1448M	1448M	Pressure Plate Assembly
317	1448N	1448N	Pressure Plate
318	1448P	1448P	"O" Ring Seal, Pressure Plate (Not Shown)
319	1448Q	1448Q	Spring, Pressure Plate
320	13264A	13264A	Plug, 1/8" Pipe
321	1448B	1448B	Gasket, Oil Filter Tank
322	A34623A	A34623A	Filter Tank with Flange and Plug
323	2796DM	2796DM	Screw, 7/16" X 2" Hex Head Cap
325	31890A	31890A	Gasket, Bearing Cover
326	13152E	13152E	Screw, 5/8" X 2" Hex Head Cap
327	2796EL	2796EL	Screw, 1/2" X 1-3/4" Hex Head Cap

* Check your Operator's Manual for correct Part Number for your specific compressor model.

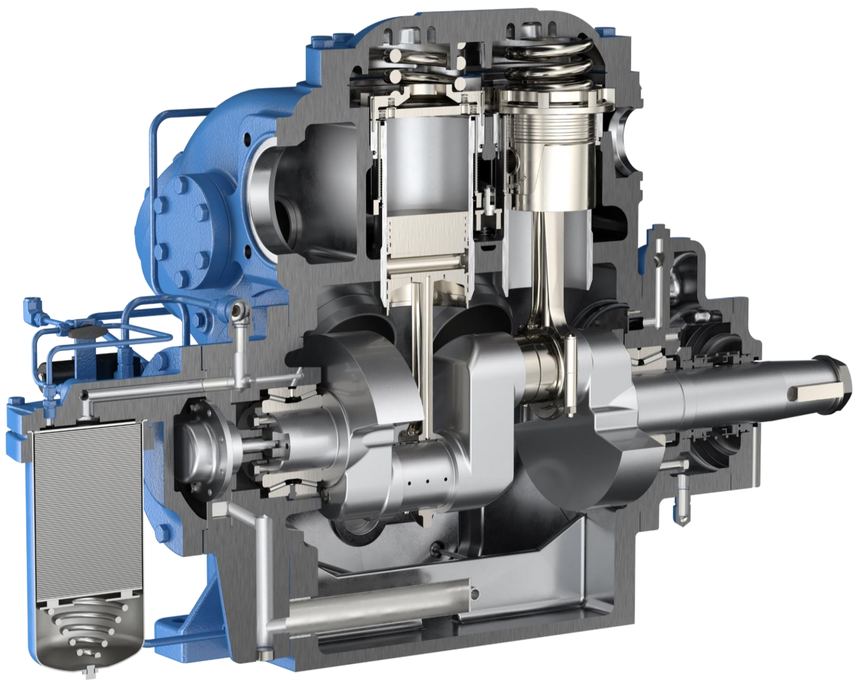

450XL Model Shown

Replacement Parts List 440 & 450XL Series Compressors

CYLINDER LINER & CAPACITY CONTROL

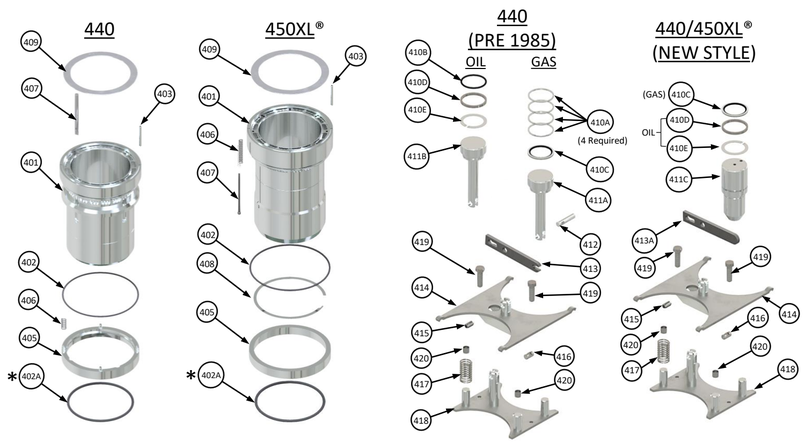

Reference Number	Vilter Part Number 440	450XL	Description
401	32687A	34510A	Liner, Cylinder (Single-Stage)
401	33179A	34710A	Liner, Cylinder (Integral Two-Stage)
402	2176BH	2176BH	Seal, "O" Ring, Upper
* 402A	2176BL	2176BL	Seal, "O" Ring, Lower (Integral Two- Stage)
403	1193Q	1193Q	Pin, 1/8" X 1-1/2" Roll
405	A33351A	35071A	Ring, Lift
406	33352A	35069A	Spring, Lift
407	33350A	35070A	Pin, Lift
408	-	1971A	Retainer, Lift Ring
409	31909A	31909A	Plate, Suction Valve
410A(a)	31989L	-	Ring, Piston, Gas
410B(a)	2176AX	-	O-Ring, (Rubber-For 0.187" Groove)
410C(b)	2557A	2557A	Ring, Gas
410D(b)	2639A	2639A	Ring, Oil
410E	2638A	2638A	Retainer, Snap Ring, Oil
411A, 410C(c)	KT034	-	Piston, Gas
411B, 410D/E(c)	KT364	-	Piston, Oil
411C(d)	35315A	35315A	Piston, Gas or Oil
412	33250C	-	Pin, Long Pivot
413(e)	33338A	-	Arm, Yoke Lifting
413A(e)	41725A	41725A	Arm, Yoke Lifting (New Style)

Reference Number	Vilter Part Number 440	450XL	Description
414	A33335A	A33335A	Yoke Assembly, Std. Unloading
414	A33575A	A33575A	Yoke Assembly, Single Cyl Unloading
415	1193X	1193X	Pin, 3/8" X 11/16" Roll
416	33250B	33250B	Pin, Short Pivot
417	33686A	33686A	Spring, Unloader Yoke
418	A33347A	A33347A	Yoke Guide, Std. Unloading
418	A33576A	A33576A	Yoke Guide, Single Cyl Unloading
419	1352D	1352D	Screw, 3/8" X 1" Hex Head Lock, Single Cyl Unloading
420	33618A	33618A	Spacer, Sleeve, Single Cyl Unloading

(a) 410A and 410B- Sold for replacement use only; will not fit present pistons.
(b) 410C and 410D- Not interchangeable with 410A and 410B used on compressor serial numbers below 3638.
(c) 411A and 411B- Present pistons cannot be used with rings kit used for compressor serial numbers below 3638.
KT034 contains 410C; KT364 contains 410D/E.
(d) 411C- New piston, used on compressors with serial number starting from 32500 for gas unloading & from 22800 for oil unloading, is not interchangeable with piston (pre 1985 year) used on compressors serial number starting from 19247 thru 22799 for oil unloading and from 3638 thru 19246 & 30000 thru 32499 for gas unloading (requires different frame). New piston has two grooves- top for gas and bottom for oil.
(e) 413 and 413A- Yoke lifting arms not interchangeable.

300 AND 400 SERIES VMC RECIPROCATING COMPRESSORS SERVICE INTERVAL REQUIREMENTS

The following service intervals are based on the usage of Vilter Manufacturing Corporation Premium Grade refrigeration oil in 300 and 400 Series VMC Compressor units.

GROUP	INSPECTION OR MAINTENANCE ITEM	SERVICE INTERVAL (HOURS) 200	5,000	10,000	20,000	30,000	40,000	50,000	60,000	70,000	80,000	90,000	100,000	110,000	120,000
UNIT	Suction Screen	I	I	I	I	I	I	I	I	I	I	I	I	I	I
	Coupling Alignment and Integrity	I	I	I	I	I	I	I	I	I	I	I	I	I	I
	V-Belt Drive Alignment and Integrity	I	I	I	I	I	I	I	I	I	I	I	I	I	I
	Water Line Strainers	I	I	I	I	I	I	I	I	I	I	I	I	I	I
	Liquid Line Strainers	I	I	I	I	I	I	I	I	I	I	I	I	I	I
CONTROL CALIBRATION	Electro-Mechanical Pressure Controls	I	I	I	I	I	I	I	I	I	I	I	I	I	I
	Transducers	I	I	I	I	I	I	I	I	I	I	I	I	I	I
	RTD's	I	I	I	I	I	I	I	I	I	I	I	I	I	I
COMPRESSOR	Oil Change (1)		R	R	R	R	R	R	R	R	R	R	R	R	R
	Flush Oil Circuit				R		R		R		R		R		R
	Oil Analysis (2)		S	S	S	S	S	S	S	S	S	S	S	S	S
	Oil Filter (3)	R	R	R	R	R	R	R	R	R	R	R	R	R	R
	Inspect Compressor (4)		I	I	I	I	I	I	I	I	I	I	I	I	I

Key I Inspect.
R Replace or Service.
S Sample.

Notes:
(1) The oil should be changed at these intervals, unless oil analysis results exceed the allowable limits. The frequency of changes will depend on the system cleanliness.
(2) Oil analysis should be done at these intervals as a minimum; the frequency of analysis will depend on system cleanliness.
(3) The oil filter on a minimum must be changed at these intervals or annually if not run continuously. However, the oil filter must be changed if the oil filter differential exceeds 25 psi or oil analysis requires it
(4) To prevent possible breakdowns, the compressor should be opened and the condition of the valves, valve seats, liners and connecting rod bearings should be checked and excessively worn parts be replaced. At the same time the crankshaft bearing float should also be checked.

VPN 35391BB 10/2018

VILTER™ EMERSON™

5555 South Packard Ave. PO Box 8904 Cudahy, WI 53110-8904
Telephone: 414-744-0111 Fax: 414-744-3483
E-mail: parts.vilter@emerson.com

For more product information and to order online visit: VPI.Emerson.com

GENUINE® VILTER Since 1867 PART